HEINZ
AUTOMATIONS-SYSTEME GmbH

HEINZ-AUTOMATIONS-SYSTEME GMBH

Installation manual

Cylindrical cam rotary indexing table

Type :

Serial no. :

TABLE OF CONTENTS

1. General

1.1 Scope

This installation manual has been prepared for cylindrical cam gears and rotary indexing tables.
It must be read and followed by any person charged with the installation, putting into operation and operation, maintenance or repair of these drives in the user's enterprise.
In the following these cylindrical cam gears and rotary indexing tables will only be called gears.
Each gear has been manufactured according to the state of the art and the recognized technical safety regulations.
Any different use or application over and above this, such as higher revolution speed and/or higher loads or different installation positions is deemed not in accordance with these specifications.

The manufacturer undertakes no liability for damages resulting therefrom. The risk is borne entirely by the user.

The application according to the specifications also includes reading the installation manual and observance of all inspection and maintenance intervals.
Maintenance must only be carried out by qualified staff that is familiar with the mode of operation of the step-by-step gears.

1.2 Safety information

The gear is in accordance with the recognized technical safety regulations.
When used as part of a machine or installation, screwed on levers, continuing chains or belt drives etc. could represent a higher risk than the gear itself.
The user of the gear is responsible for securing the hazardous area at the place of installation in order to avoid any danger caused by revolving levers, downstream connected gears and any kind of drives. Moreover, we assume no responsibility for any possible shearing or crushing which may result from the assembly of the gearing on site.

1.3 Shipment

Each gear has been carefully checked and duly packed before shipment. However, upon arrival at the place of installation, we kindly ask you to immediately unpack the gear and inspect it for transportation damages.
Any complaints must be immediately notified to the carrier.

1.4 Transport information

For transport without packaging, can be used the existing fixing holes or tapped holes for ring bolts. The gear must be attached to these holes only.
The weight of the gears is given in table 1.5.

1.5 Weight of the gear types

Gear type	Housing	Weight [kg]
HTT 45	GG	13.5
HTT50	GG	16
HTT80	GG	36
HTT100	GG	80
HTT300	GG	580
HTT315	GG	600

2. Instructions for installation and operation of the gears

2.1 Mounting position

Due to its universal construction, the gear can be integrated into a machine or installation in nearly every position.
The mounting position, the fixing holes and oils bores, if applicable, have already been specified by the customer when placing the order.
The predefined mounting position is decisive for the lubrication of the gear components and must therefore not be changed on-site.

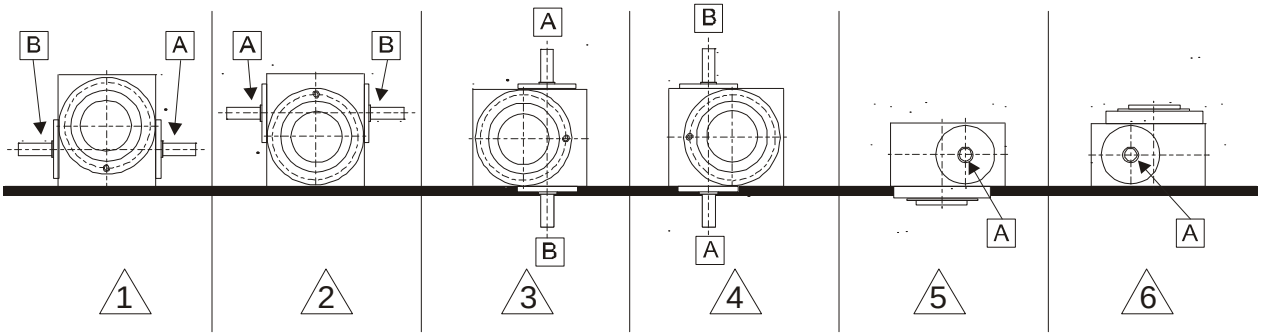

Figure 1: Gear mounting positions

2.2 Gear mounting

Due to the working principle of the gear, the input shaft and the output flange are subjected to variable torques.
Therefore

- the gear should be mounted on a stiff, machined foundation
- the mounting bolts must be secured and additional fixing by means of dowel pins should be provided if possible
- the connection between the gear and the driven useful load should be direct, free of play and stiff against torsion. This applies also to the driving of the gear
- make sure that toothed belts and driving chains are sufficiently dimensioned and tightened according to instructions.

2.3 Gear operation

The following instructions must be observed for the operation of the gear:

- elasticity and plays in the driven masses may excite oscillations and must be avoided.
- an overload protection should be mounted on the output shaft in order to ensure optimal protection of the gear and the drive unit.
- the step-by-step gear should always be stopped and started within the range of the dwell angle. Otherwise there is a risk of additional oscillations that could damage the gear.
- in case of E-stop (even in touch mode) there can be considerably higher moments than in normal operation (depending on the used driving unit), which could damage the gear.
- the usual power supply and frequency at the place of installation must conform to the technical data of the drive motor. All connections including earth and neutral lines have to be carried out according to the regulations of the VDE and/or the competent electric power company.
- outside the machine appropriate safety devices have to be provided.

3. Initial operation

3.1 Gear function

The gears form a compact, robust unit and allow through the use of exactly calculated cylindrical cams the transformation of a constant input speed into an optimal, exactly defined, smooth and jerkless intermittent output movement.
The cam rollers arranged in the follower are exactly guided by the hardened and ground curved path in the cylindrical cam.
This curved path has different slopes and is divided into a dwell angle and an indexing angle range.
Turning of the cam produces via the curved path and the cam roller the predefined smooth and jerkless movement of the output flange.

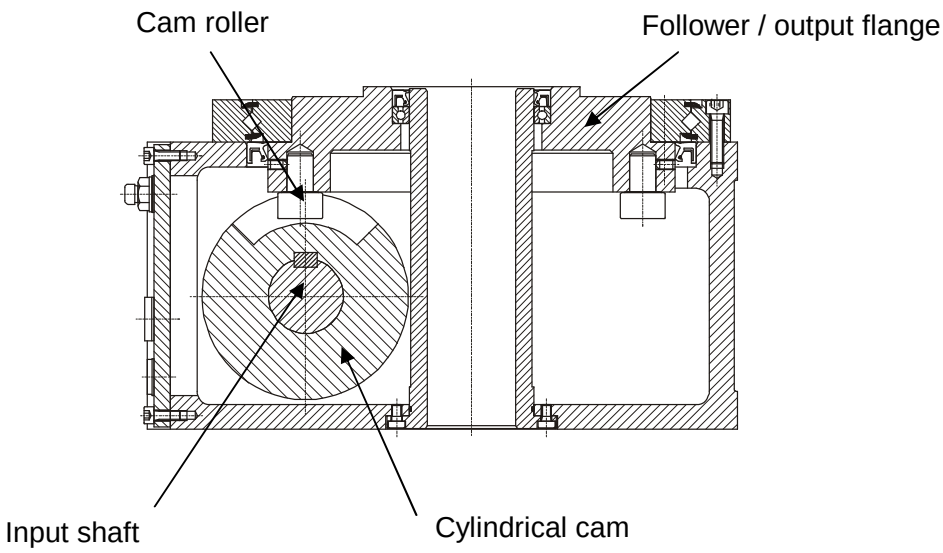

The course of the curve being symmetrical by default allows optionally turning to the left or to the right.
The slope of the dwell angle range is zero. This allows via the cam rollers an exact self-locking positioning of the output flange without additional locking.
When using a brake motor, the positioning of the output flange is independent of the braking accuracy of the motor, because the exact position is already given by the position of the cam rollers in the dwell angle range. The entire dwell angle range can be used for braking (see 3.3).

3.2 Oil level

Before the initial operation the oil level must be checked. It is sufficient when the oil is visible through the sight glass and the gear is located in the intended mounting position.
When integrating the gear into a more complex installation, make sure that an oil change is still possible. Oil types: see chapter 4.4.

Gear type	Oil charge [L]
HTT 45	0.15
HTT50	0.15
HTT80	0.6
HTT100	3.8
HTT300	12.0
HTT315	12.0

3.3 Intermittent service

If the dwell angle range of the cam is not sufficient for the production-related standstill, the dwell time can be prolonged by means of a brake motor.
The braking process is started by a limit switch, which is actuated by a lifting cog connected to the input shaft.
When putting into service and during operation, make sure that the feather key groove of the input shaft is located parallel to the housing side 1 after braking (in case of double shifting also rotated through 180°, cam rollers should be located in mid dwell).
In gears with an additional index hand, make sure that the index hand is located within the middle of the marking label after each braking process.

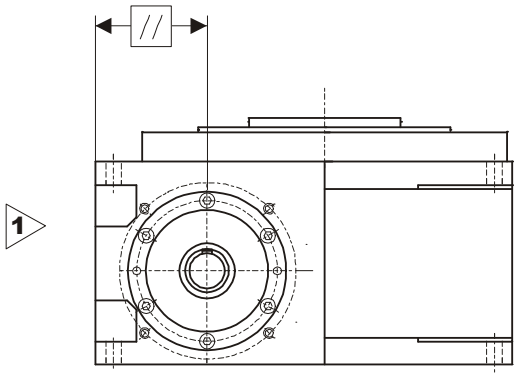

3.4 Important note

In drive units with two speeds, the higher speed (fast speed) is in principle used for the standard operation.
The smaller speed (creep speed) must only be used for setting up the installation or after an "emergency shutdown" to bring it into the dwell angle.
In automatic operation you should never shift to the creep speed during motion phase.
In controls that only allow shifting of the fast speed via the creep speed, this must only be carried out within the dwell angle, that means only within the range of the marking label or during the standstill of the output flange.

Non-compliance of these instructions shall result in an exclusion of all warranties by the manufacturer in the event of damage.

4. Maintenance instructions

4.1 General information

For all correspondence or spare parts orders, please always specify the gear type and the serial number of the respective gear.

4.2 Drive

For the maintenance instructions of the gear brake motor or other drives, please refer to the delivered manufacturer's instructions.

4.3 Motor brake

Due to the unavoidable wear of the motor brake, it is necessary to check it from time to time.
In this connection, it is important to ensure that, after braking, the gear always stops in the dwell angle range.
If, after the braking process, the cam has already left the dwell angle range, this may be a sign of an incorrectly adjusted limit switch or a loss of efficiency of the brake motor. In this case it should be adjusted or replaced.
When putting into service again and during operation, please ensure that the feather key groove of the input shaft or the marking are always parallel to the housing side 1 after braking. (In case of double shifting also rotated through 180°, cam rollers should be located in mid dwell). In gears with an additional index hand, make sure that, after each braking process, the index hand is located within the middle of the marking label.

4.4 Gear

4.4.1. Oil Lubrication

In Standard the gear unit is delivered with the synthetic lubricating oil **"Klübersynth GHE 6 – 460"**

It is lubricated for life, i.e. no oil changes are necessary at all. The oil level should be checked at regular intervals.
Sufficient oil is present if when the gear unit is stationary the oil can be seen in the sightglass
The lubrication of the cam rollers and the came is thus guaranteed

For rotating speed < 150 rpm	For rotating speed > 150 rpm
Klübersynth GHE 6 - 460	Klübersynth GHE 6 - 100
Mobil Glygoyle HE 460 (ISO V6 460)	Mobil Glygoyle 22 (ISO V6 150)
Shell Omala S4 WE 460	Shell Omala S4 WE 150

WARNING
Warning: Never mix different oil sorts!

WARNING
Only top up with the lubricant described above!

If used for the food industry, the gear unit is delivered with NSF H1 registered, conform to FDA 21 CFR § 178.3570 oil "Klübersynth UH1 6 - 460"

It is lubricated for life, i.e. no oil changes are necessary at all. The oil level should be checked at regular intervals.
Sufficient oil is present if when the gear unit is stationary the oil can be seen in the sightglass
The lubrication of the cam rollers and the came is thus guaranteed

For rotating speed < 150 rpm	For rotating speed > 150 rpm
Klübersynth UH1 6 – 460	Klübersynth UH1 6 – 150

WARNING
Warning: Never mix different oil sorts!

WARNING
Only top up with the lubricant described above!

4.4.2. Grease Lubrication

It is lubricated for life, i.e. no grease are necessary at all. The grease level should be checked at regular intervals.

Normal Grease Lubrication	NSF H1 registered, conform to FDA 21 CFR § 178.3570
Castrol Olit 00	Cassida RLS 00
Microlube GB 00	Klübersynth UH1 14-1600

WARNING
Warning: Never mix different oil sorts!

WARNING
Only top up with the lubricant described above!

5. Inspection instructions

5.1 Inspection cycle

Under normal operating conditions the following components should be inspected after approx. 8000 hours of operation:

- running surface of the cam roller on the cams
- cam rollers (running surface and radial play)
- initial tension of the tapered roller bearing
- seat and function of the rotary shaft seals

Under difficult operating conditions such as high surrounding temperature, heavy vibrations etc. this maintenance interval should be reduced accordingly.

6. Spare parts assembly

6.1 Note

Before starting with the following disassembly you should carefully read the text below.
Before reinsertion, all components must be cleaned and checked for proper function.
When using solvents, make sure that they don't come into contact with the O-rings or the rotary shaft seals.
For any possible further enquiries and spare parts orders, please have ready the type and serial number.
A spare parts list and general assembly drawing are attached to this installation manual.

6.2 Assembly kit

The assembly kit is one unit and consists of the cylindrical cam, the follower and the cam rollers.

The possible wear of cam rollers and globoidal cam may require the replacement of

- cam rollers
- follower
- cylindrical cam
- complete assembly kit

6.2.1 Replacement of cam rollers (cylindrical cam remains in place)

- Drain oil
- Remove all parts or fixtures attached to the indexing plate by the customer
- Turn input shaft into dwell angle range
- Unscrew output flange (you only have to twist off the cylinder screws from the outer ring of the output bearing)
- Take off out bearing together with follower vertically upwards. Before this, remove rotary shaft seal and bearing (if applicable), remove output flange with follower from housing
- Unscrew set screw from follower (they are glued in place) and remove cam rollers
- Check cam roller stem bores in the follower for damages and maybe for enlargement
- If there are damaged bores: see 6.2..2.2

- If the bores are flawless, press new cam rollers without angle errors (no jamming) into the follower and secure set screws. The race of the cam roller must be easily rotatable
- For cam rollers without notch, use a core hole drill to make a centre bore in each cam roller shaft. Centering depth depends on the center point of the set screw DIN 914
- Secure cam rollers with set screws (glue threads in place)
- Check cylindrical cam and replace it by a new one, if necessary (see chapter 6.2.3)
- Reinsert output flange together with follower into housing (pay attention to the position of the drilling template in the output flange)
- Turn input shaft and check assembly kit for regular running
- Refill oil

6.2.2 Replacement of follower (cylindrical cam remains in place)

- In case of damaged cam roller stem bores pull off cross roller bearing
- Screw on new follower with mounted cam rollers
- Lightly heat tapered roller bearing (max 80°C) and slide it over output flange
- For further assembly please refer to 6.2.1

6.2.3 Replacement of cylindrical cam (follower does not remain in place)

- Dismount motor or components of foreign make
- Drain oil
- Turn input shaft into dwell angle range
- Screw off housing cover
- To replace the cylindrical cam, it is necessary to remove the follower first, as explained in chapter 6.2.1
- Loosen screws of bearing covers and pull out cover from housing
- Loosen screws and remove housing cover
- Take off inner rings of the tapered roller bearings from the output shaft, release locking plates and loosen groove nuts
- Remove drive shaft from cylindrical cam and take out cam from housing
- Check seat of the feather key and its groove for damages
- Introduce new cylindrical cam into housing and insert input shaft. Make sure that cylindrical cam is in the correct mounting position. An incorrect installation prevents the gear from being turned and/or may cause considerable damage. Slightly tighten groove nuts. Use new locking plate.

- Before reassembling the bearing, you should check rolling bearing and their seats. Bearings have to be replaced if necessary
- Fit in remaining parts in reversed order (rotary shaft seals and O-rings have to be replaced).
- Mount follower
- Turn input shaft by hand and check assembly kit for regular and smooth running as well as its operability. Use groove nuts to make fine adjustment of cylindrical cam. Make sure that the cam rollers have contact over the entire width

  Check with China ink!

  After having adjusted the cam, tighten groove nuts and secure by means of locking plate
- Mount housing cover
- Bring gear into final mounting position and refill oil (see 3.2 and 4.4)
- Reinsert gear motor, attachment parts and limit switch
- Fill in oil

6.2.4 Complete replacement of assembly kit

For dismounting and mounting of follower and globoidal cam, please refer to chapters 6.2.1. to 6.2.3.

NOTE:

All repair works require a certain experience and should therefore only be carried out by service technicians of HEINZ AUTOMATIONS-SYSTEME GmbH.

6.3 Tapered roller bearings

When mounting new tapered roller bearings, ensure backlash-free adjusting of the bearings. Too large or too small bearing play can be adjusted by aligning the bearing covers or the eccentric cover. Subsequently, the assembly kit has to be checked for proper function and readjusted by turning the input shaft, if necessary.

6.4 Spare parts drawing

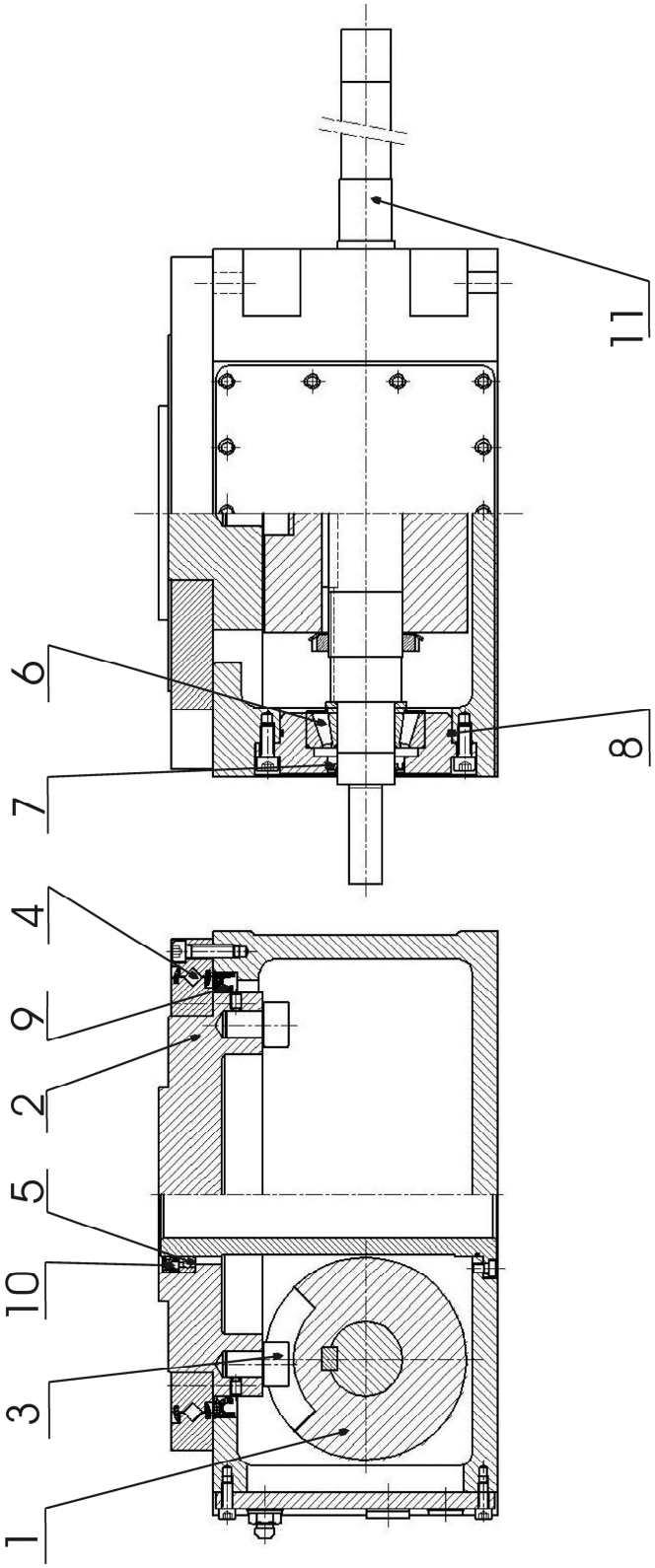

6.5 Spare parts and wearing parts

1.	Assembly kit		
1.1	Cylindrical cam		(1)
1.2	Follower		(2)
1.3	Cam rollers		(3)
2.	Bearing - kit		
2.1	Cross roller bearing	output	(4)
2.2	Roller bearing	output	(5)
2.2	Tapered roller bearing	output	(6)
3.	Seal - kit		
3.1	Rotary shaft seal	input	(7)
3.2	O–ring	input	(8)
3.3	Rotary shaft seal 1	input	(9)
3.4	Rotary shaft seal 2	input	(10)
3.5			
4.	Input shaft		(11)

7. Final note

All repair works require a certain experience and should therefore only be carried out by HEINZ service technicians.

HEINZ-AUTOMATIONS-SYSTEME GMBH
Lilienthalstr. 21
64625 Bensheim
Phone: +49 (0) 6251 / 1069-0
Fax: +49 (0) 6251 / 1069-99
http://: www.heinz-automation.de
E-Mail: mail@heinz-automation.de